Current part is item (3) on diagram. Available at www.oshkoshequipment.com

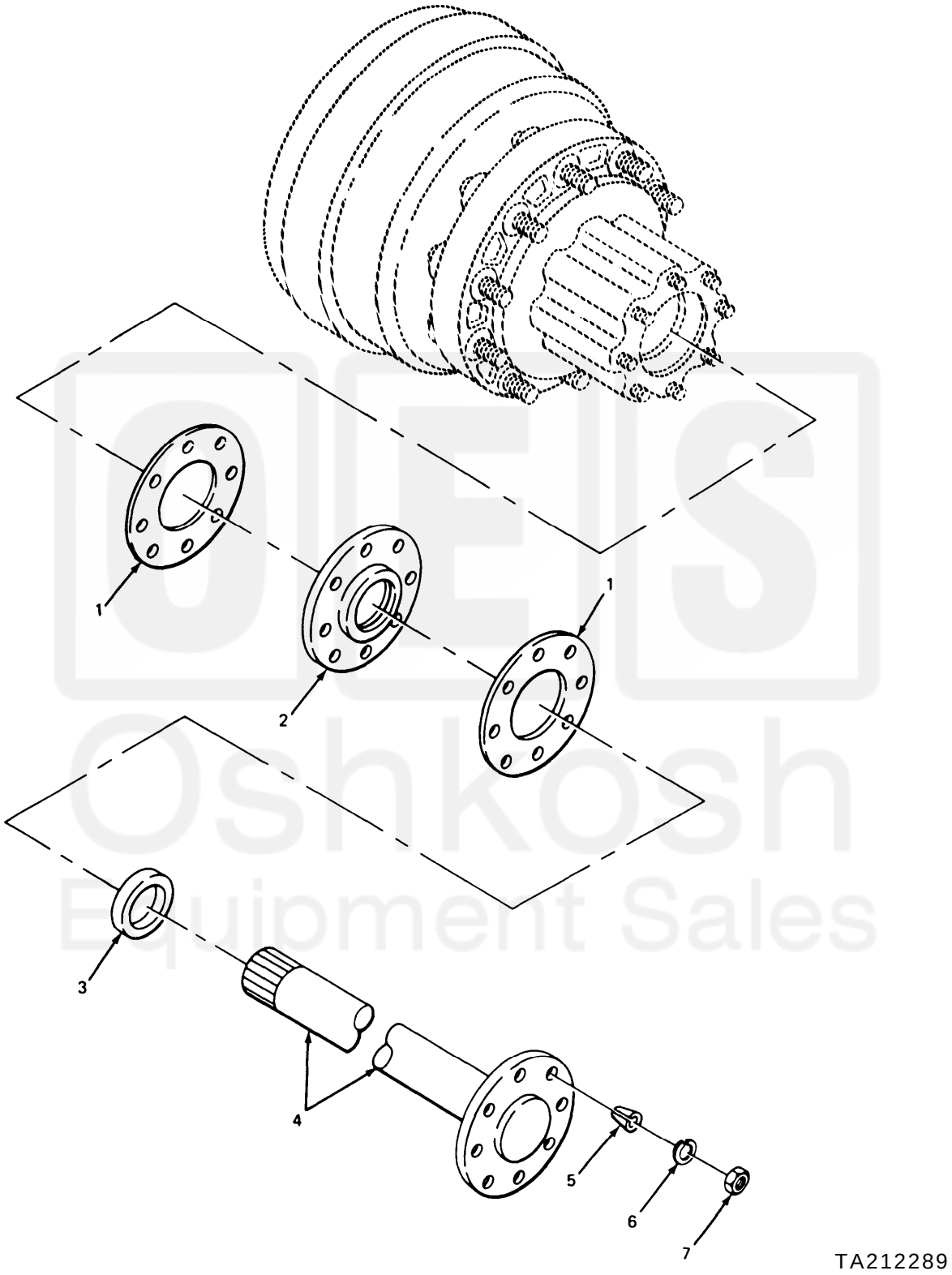

FIGURE 71. AXLE SHAFT AND RELATED PARTS.

Current part is item (3) on diagram. Available at www.oshkoshequipment.com

Current part is item (3) on diagram. Available at www.oshkoshequipment.com

(1) ITEM NO.	(2) SMR CODE	(3) FSCM	(4) PART NUMBER	(5) DESCRIPTION AND USABLE ON CODE (UOC)	(6) QTY
				GROUP 11 REAR AXLE	
				GROUP 1100 REAR AXLE ASSEMBLY	
				FIG. 71 AXLE SHAFT AND RELATED PARTS	
1	PAOZZ	45152	4600-IA-96	GASKET	4
2	PAOZZ	78500	226	SEAL,PLAIN ENCASED	4
3	PAOZZ	45152	45CTA4C	WIPER,OIL SEAL,CUTER,AXLE 3 (2), AXLE 4 (2)	2
4	PAOZZ	45152	5EX163	SHAFT,AXLE,AUTOMOTI LEFT SIDE,AXLE 3 (1),AXLE 4 (1)	1
4	PAOZZ	45152	144EX627	SHAFT,AXLE,AUTOMOTI RIGHT SIDE, AXLE 3 (1),AXLE 4 (1)	1
5	PAOZZ	45152	472TA132	BUSHING,TAPERED	16
6	PAOZZ	45152	2263HX	WASHER,LOCK	16
7	PAOZZ	45152	432-A-1	NUT,PLAIN,HEXAGON	16
				END OF FIGURE	

Current part is item (3) on diagram. Available at www.oshkoshequipment.com